Software Connections

Standard Engineering Practices

Document: 8.4
Date May 15, 2002
Supersedes: none

Connections To Blocks or Objects

In a control program drawing, connections are required to link blocks or objects together creating the control sequence. The connectors can overtake the drawing and make it impossible or near impossible to read and follow the control program drawing. In an effort to keep the drawing legible, often "short pointers" or references are used. These references save drawing space and reduce clutter.

A general rule for connectors is to keep them in a straight line as much as possible and use them as much as you can. If a drawing gets too cluttered by these connectors, then use references (or "Short Pointers"). If a particular block or input is used for many items (Ex. a fan status), a reference is recommended. Where references and definitions are used, standard naming conventions will be used whenever possible. *All I/O and setpoint references* will conform to these standards. The standard naming conventions are found in the Invensys Standard Engineering Practices Manual.

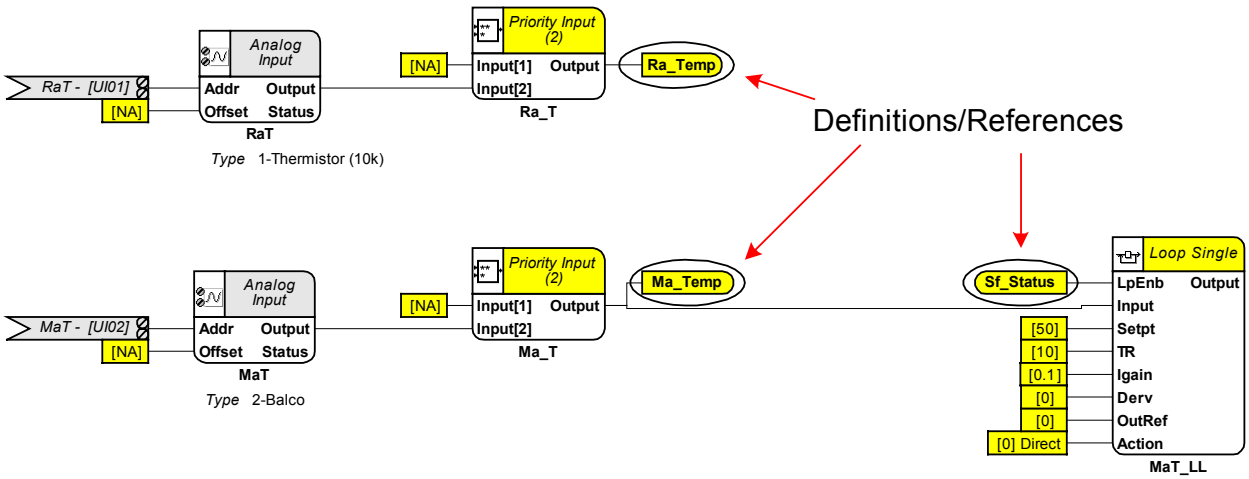

In laying out a control drawing, you don't need to have the inputs or outputs in a line from the top of the drawing to the bottom in order of input. It may make sense to put a temperature input above a setpoint if the two values feed into a LOOP or TSTAT block. This way the connectors are kept in a straight line that is readable and easy to follow.

Confidential Information for Invensys Energy Solutions Employees and Affiliates
Building Systems - Americas
© 2002 Invensys. All Rights Reserved.

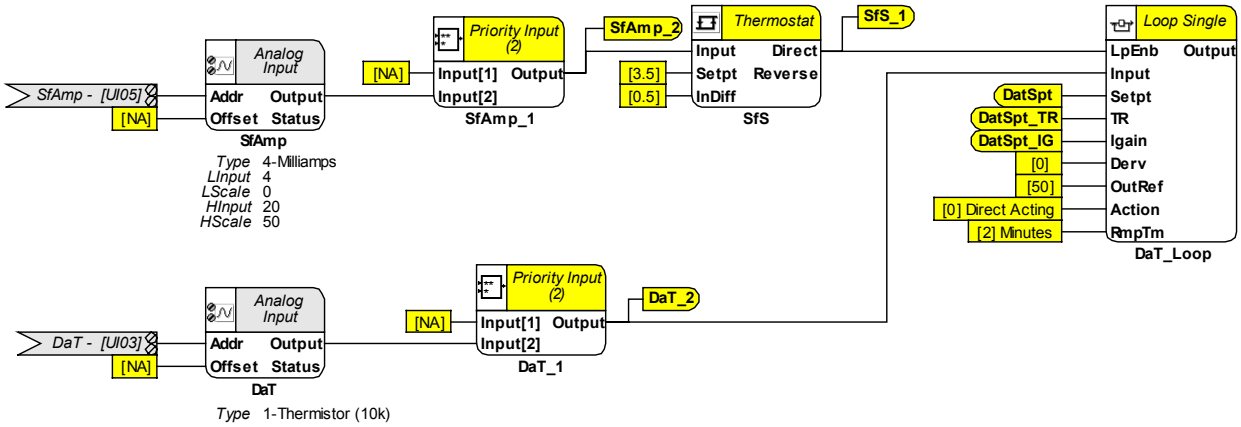

The layout of a control program drawing will be discussed in another section in more detail.

I/A control programs tend to be more congested due to the SNVT requirements in order to get information in and out of a controller. The following lists some requirements for I/A controllers:

- All SNVTs will use References and Definitions. The Definition and Reference name will follow the Invensys standard software tag names where possible (Ex. A discharge air setpoint definition would be DaTSpt).
- All I/O will use References and Definitions and use standard naming conventions.

Confidential Information for Invensys Energy Solutions Employees and Affiliates
Building Systems - Americas
© 2002 Invensys. All Rights Reserved.