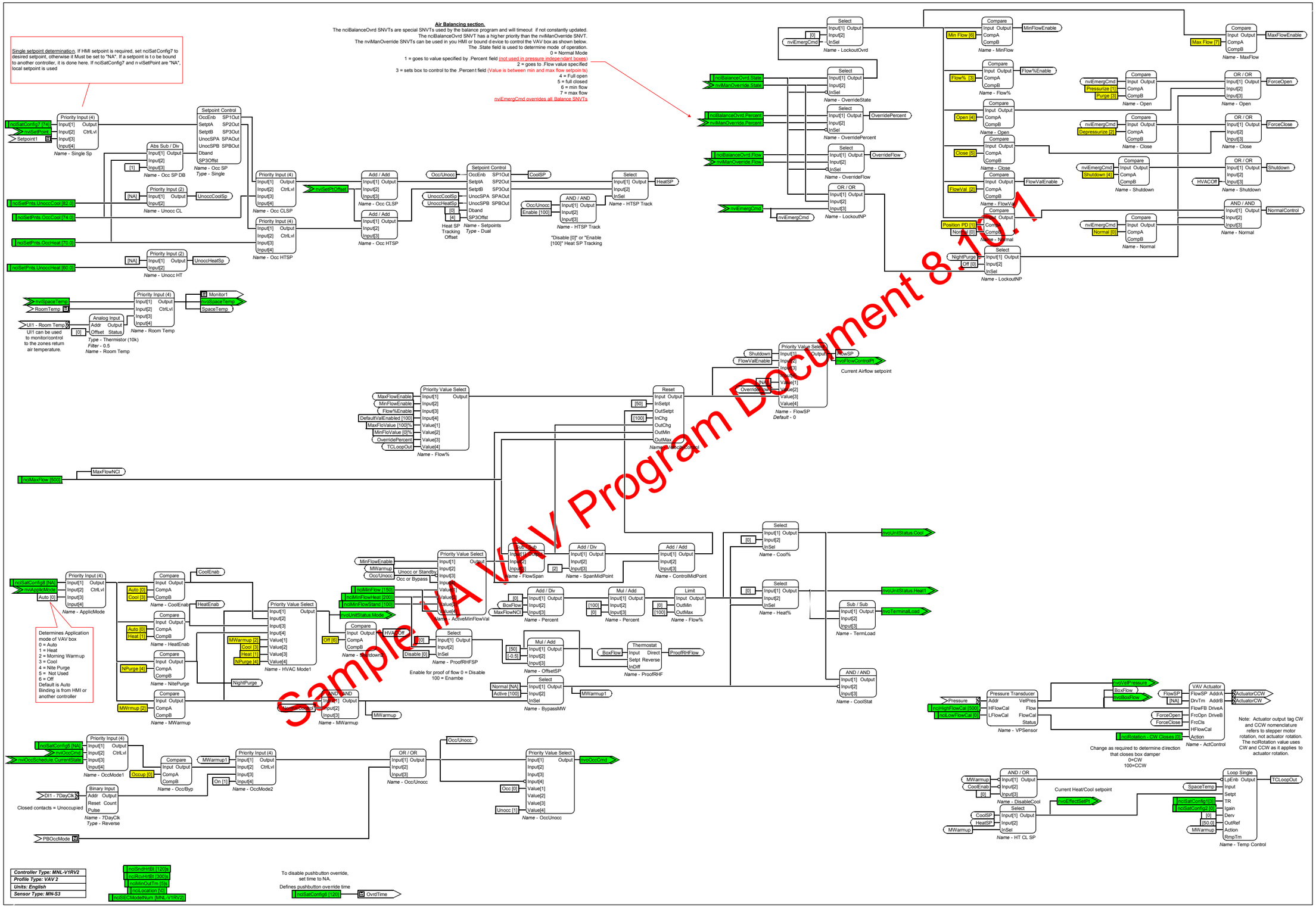

Controller Type: MNL-V1RV2	
Profile Type: VAV 2	
Units: English	
Sensor Type: MN-S3	

MNL-V1RV2
Sample I/A VAV Program
(Doc 8.6.1)
Control Logic

Variable Air Volume Box w/o reheat

Architect:
Engineer:
Contractor:

invensys

JOB:
ENGR:
CHKBY:

FILE: 8.10.1 sample i_a vav program.vsd
DATE: 5/15/2002

Sheet 1 of 1

No.	REVISION	DATE